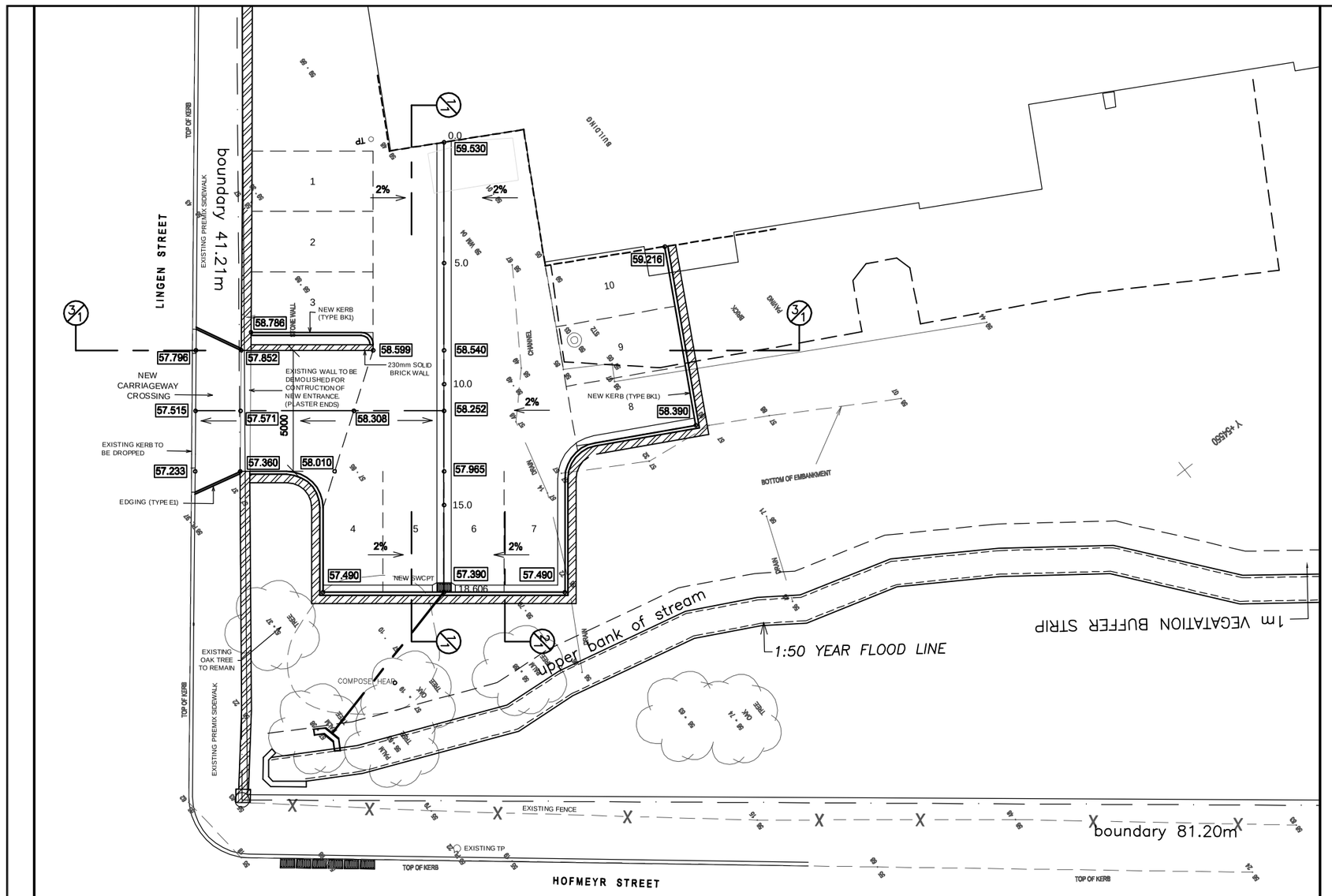

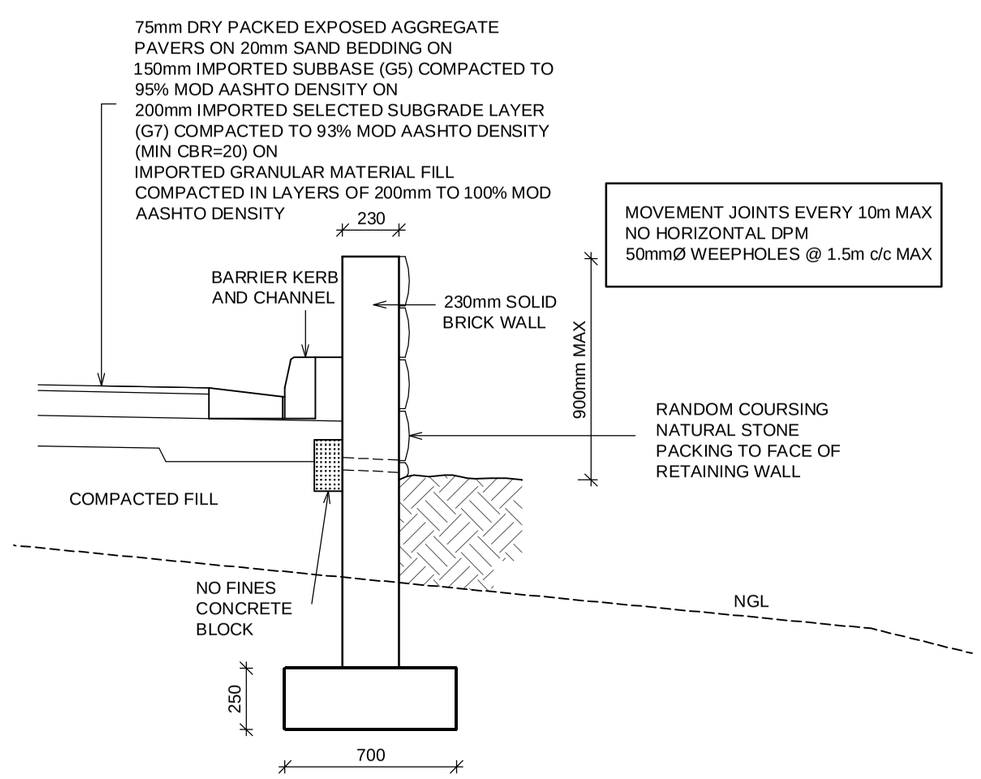

1:25 SECTION 2/1

NOTES

GENERAL

1. THESE NOTES TO BE READ TOGETHER WITH THE PROJECT SPECIFICATION.
2. THIS DRAWING TO BE READ TOGETHER WITH ALL RELEVANT ARCHITECT'S AND/OR ENGINEER'S DRAWINGS AND SPECIFICATIONS.
3. ALL DETAILS AND DIMENSIONS SHOWN ON THIS DRAWING ARE SUBJECT TO CONFIRMATION ON SITE AND DURING CONSTRUCTION.
4. ALL CONSTRUCTION WORK TO, OR ADJACENT TO, EXISTING SERVICES, TO BE CARRIED OUT IN STRICT ACCORDANCE WITH THE REQUIREMENTS OF THE RELEVANT AUTHORITIES.
5. ALL WORK TO BE CARRIED OUT IN ACCORDANCE WITH THE CITY ENGINEERS' STANDARD SPECIFICATIONS FOR ROAD WORKS – DATED FEB. 1975 AND SUPPLEMENT DATED OCT. 1985; SEWER AND STORMWATER DRAINAGE INTERCEPTORS; TYPE DRAWINGS RO/2272/1–8; AND WATERWORKS SPECIFICATIONS AND DRAWINGS.

SCALE - 1:200

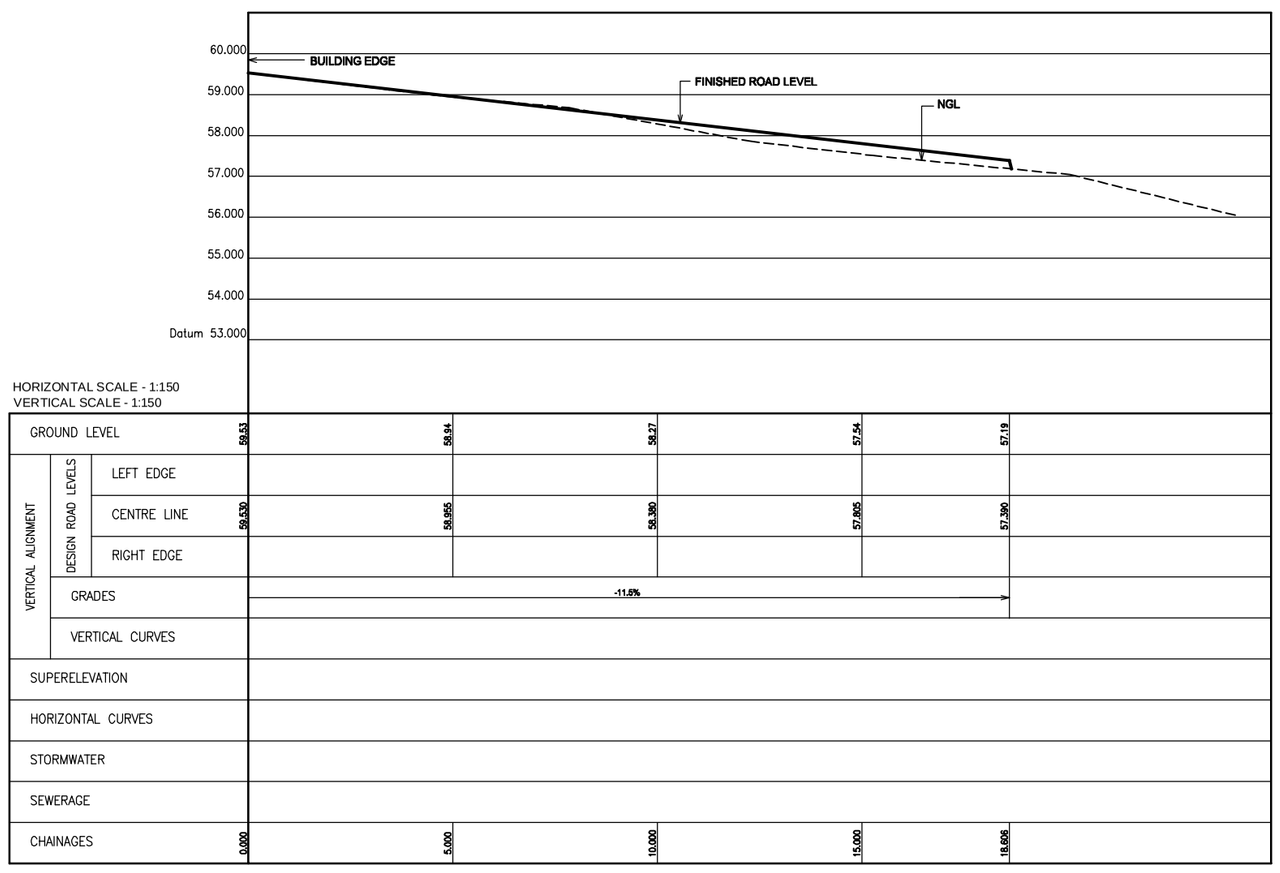

LONGSECTION 1/1

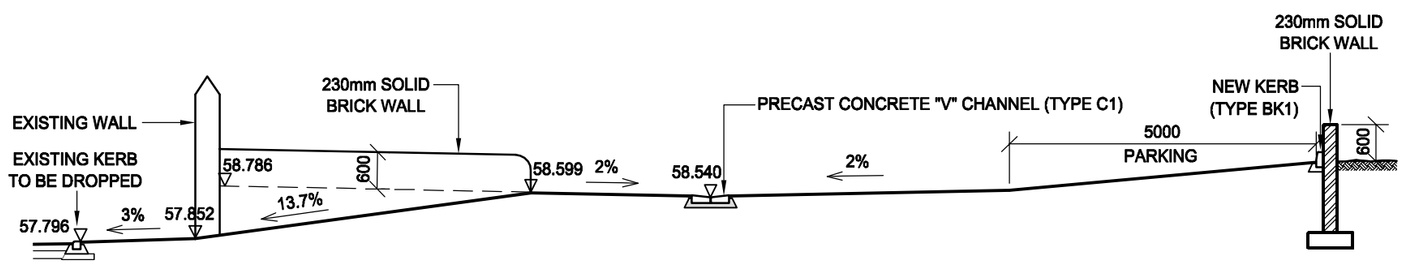

1:100 SECTION 3/1

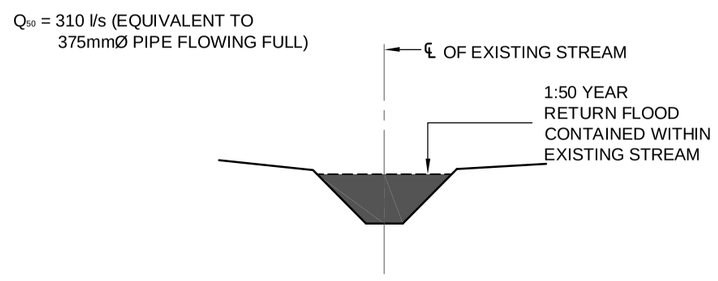

1:50 SECTION THRU STREAM

rev	date	details

THE DETAILS AND DESIGN SHOWN ON THIS DRAWING ARE COPYRIGHT AND REMAIN THE PROPERTY OF DE VILLIERS SHEARD.

de Villiers Sheard cc

CONSULTING + STRUCTURAL + CIVIL + ENGINEERS + PROJECT MANAGERS

16 Chester Rd | P.O. Box 625 | Rondebosch | 7701 | Cape Town | South Africa
Tel.(021) 689 2377 | Fax. (021) 686 3389 | www.devs.co.za | devs@devs.co.za

Client
SPES BONA GIRL STUDENTS RESIDENCE

Project
PROPOSED NEW PARKING LINGEN STREET

Section
PARKING (1)
LAYOUT & LONGSECTION

Date	Designed	DrwgNo & Rev
JULY 2008	P.M.WIUM	1040-C-1.1
Drawn	Checked	
M.S		

PDF created with pdfFactory Pro trial version www.pdffactory.com